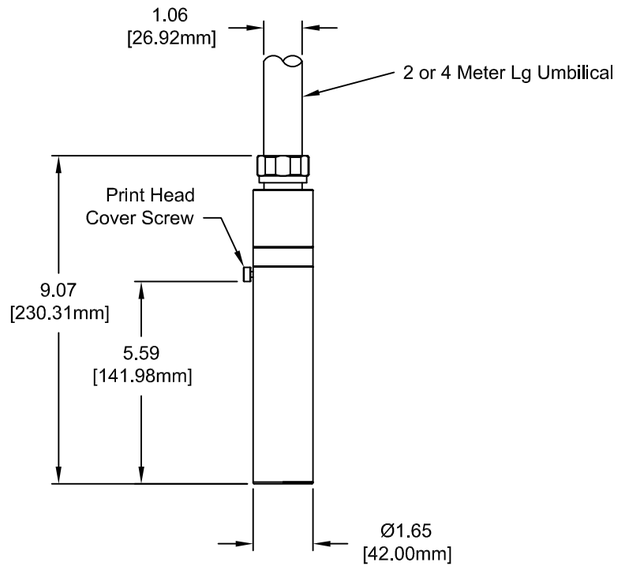

Print Head
Dimensions

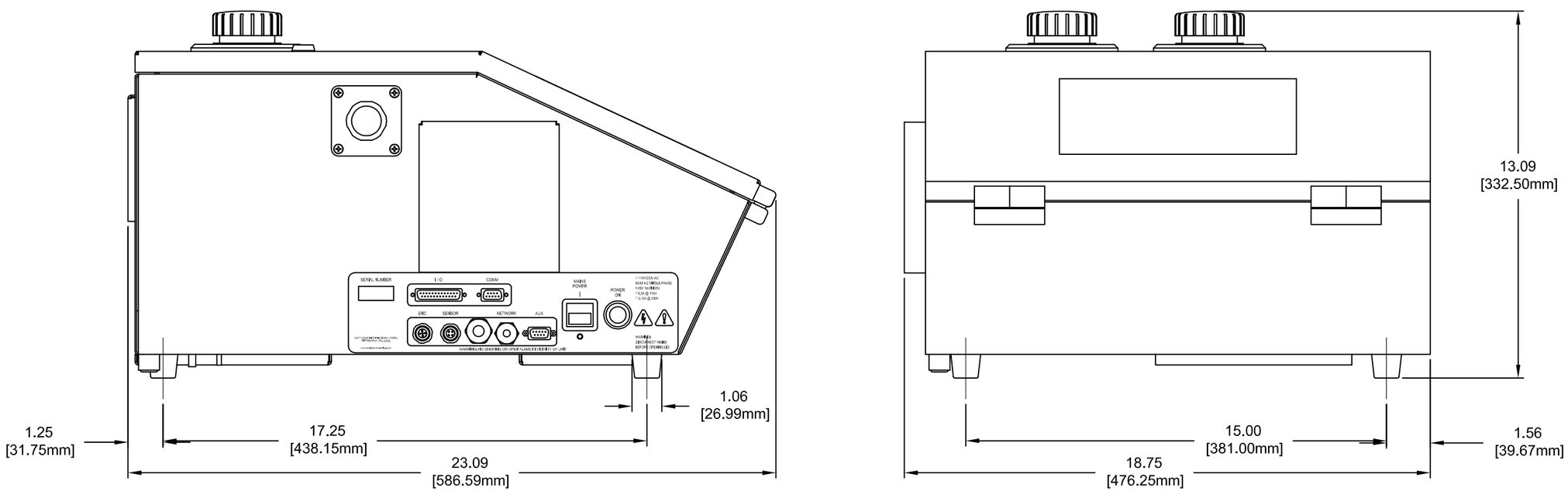

C84 Controller
Dimensions